Planck-Pi DK v1.0
Designed by Pengzhihui

Updated on 2022-4-5

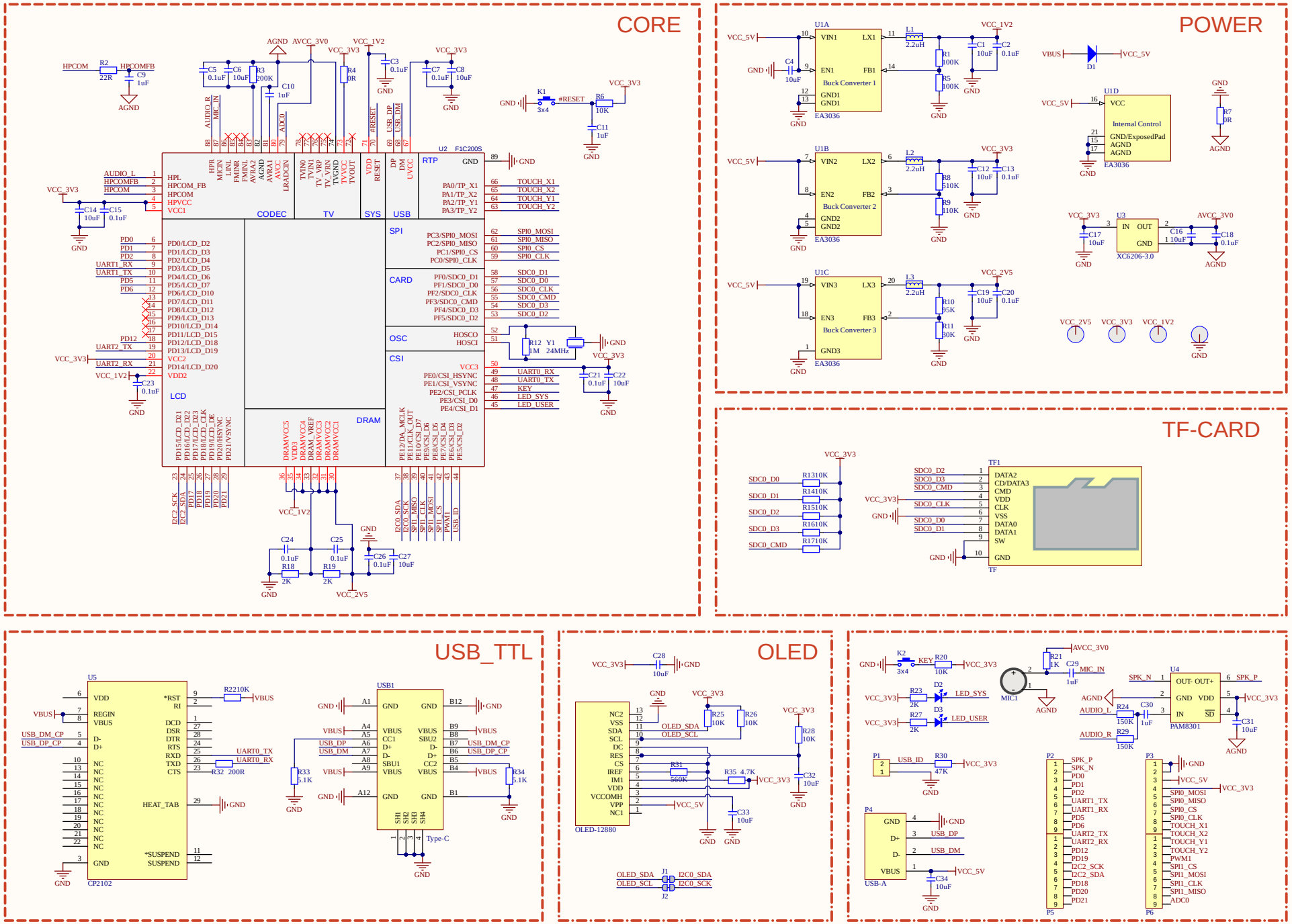

Board Stack Report